Installation instructions

Audi A4 (8W) Limousine 2016 ►

Carrier units
Scope of delivery 8W5.071.126
Audi Genuine Accessories®

Edition 09.2015

Contents

1 General notes ... 1

2 Safety notes ... 2

2.1 General safety notes ... 2

2.2 Safety notes to be checked before and after each journey and when in use ... 3

2.3 Safety instructions for driving with carrier units ... 4

2.3.1 Altered vehicle height ... 4

2.3.2 Sensitivity to side winds ... 4

2.4 Safety notes for loading ... 4

2.4.1 Permissible roof load and loading ... 4

2.4.2 Loading the roof load in the correct manner for the load in question ... 5

2.4.3 Width of load ... 5

2.4.4 Tensioning carrier units ... 5

2.4.5 Installation and loading sequence for carrier units ... 6

2.4.6 Rear lid opening range ... 6

2.4.7 Opening area of the sliding/tilting sunroof and panoramic roof ... 6

3 Scope of delivery and overview of components ... 7

3.1 Scope of delivery ... 7

3.2 Overview of components ... 7

4 Installing/removing carrier units on the vehicle ... 8

4.1 Installing carrier units on the vehicle ... 8

4.2 Installing add-on components ... 11

4.3 Removing the carrier units from the vehicle ... 11

4.4 Maintenance instructions ... 11

4.5 Technical notes ... 13

4.6 Adjusting the carrier unit width ... 13

All rights reserved.
No reproduction without prior agreement from publisher.

Copyright © 2015 Audi AG, Ingolstadt

Printed in Germany

1 General notes

Please read these instructions carefully and note the WARNING, Caution and Note descriptions before installing the carrier units.

WARNING

Text with this symbol contains information concerning your safety and indicates potential accident and injury risks.

Caution

Text with this symbol indicates the risk of damage to your vehicle.

Note

Text with this symbol contains additional useful information.

AUDI AG will not accept responsibility in the event of failure to comply with these assembly instructions.

2 Safety notes

2.1 General safety notes

⚠ ***WARNING***

Please read these assembly instructions carefully before starting installation. Non-compliance with these installation instructions and safety notes will compromise your safety and that of third parties.

⚠ ***WARNING***

All bolted connections and connections for the carrier units and for the roof rack modules must be checked prior to travelling to make sure that they are correctly positioned and installed. Tighten if necessary.

Recheck bolted connections and connections at appropriate intervals and tighten if necessary. The bolted connections and connections must be checked at short intervals if travelling on a poor stretch of road.

If these guidelines are not observed, this can result in the carrier units or the roof rack modules becoming loose or falling off – risk of accident!

⚠ ***WARNING***

The procedures and safety notes detailed in these instructions for the installation, handling and use of the carrier units must always be observed.

- ***Deviating from these instructions can cause the carrier units or the mounted roof rack module to come loose.***
- ***The carrier units are designed such that the vehicle will not be damaged if components are installed, handled and used properly.***
- ***The manufacturer is not liable for any damage resulting from failure to comply with the installation procedure or notes specified.***
- ***All forms of warranty claim against the manufacturer are invalidated if installation, handling or use of the components is not carried out as specified in these instructions.***

⚠ ***WARNING***

Repairs or the replacement of parts must only be performed by a qualified workshop. It is recommended that genuine spare parts available from your Audi partner are used.

⚠ ***WARNING***

The driver is responsible for making sure that his view and ability to hear are not impaired by his load or by the condition of the vehicle.

He must make sure that the load does not prevent the vehicle from complying with country-specific regulations and that road safety is not compromised.

Note

- *When driving with a roof load, make sure that the German Road Traffic Regulations (StVZO) or any country-specific regulations are observed.*
- *For reasons of convenience, it is common for the carrier units with/without roof rack modules to remain on the vehicle, even if they are not in use. Your vehicle will consume more fuel due to increased wind resistance.*
- *We therefore recommend that you remove the carrier units after use.*
- *Increased wind noise can result from driving with the roof bars attached.*
- *Do not use elasticated straps or bungee cords!*
- *Replace damaged components immediately.*

2.2 Safety notes to be checked before and after each journey and when in use

⚠ ***WARNING***

Check that the carrier units and the load to be transported are securely attached:

- ***Before the start of every journey,***
- ***After approx. 10 km of the journey,***
- ***approx. every 300 km on good roads***
- ***Frequently on poor roads (due to vibration),***
- ***Regularly to make sure that there has been no movement/displacement.***

If the carrier units are not checked to make sure that they are secure and to check whether any fasteners need tightening, they could work loose and parts may therefore be lost, despite installation being carried out properly – risk of accident!

In the event of a change in position, drive at a reduced speed until the next opportunity to stop safely and then re-tighten the bolted connections and fixtures on the carrier units.

2.3 Safety instructions for driving with carrier units

2.3.1 Altered vehicle height

Caution

Fitting carrier units changes the height of your vehicle.

Pay particular attention to:

- ***Low-hanging branches,***
- ***Passages with reduced head-room clearance,***
- ***Entrances to garages with reduced head-room clearance,***
- ***Height restrictions in multi-storey car parks and underground car parks.***

Caution

Do not enter a car wash with carrier units with/without roof rack modules installed.

2.3.2 Sensitivity to side winds

WARNING

The load affects driving and braking behaviour and the vehicle's sensitivity to side winds. Adapt your driving style accordingly – risk of accident!

Do not exceed the maximum speed of 130 km/h (81 mph).

When driving in strong side winds, make sure that you take extra care:

- ***When moving into and out of the slipstream of a lorry,***
- ***When driving past hedgerows, trees, walls and buildings as well as any other wind barriers,***
- ***When driving over bridges.***

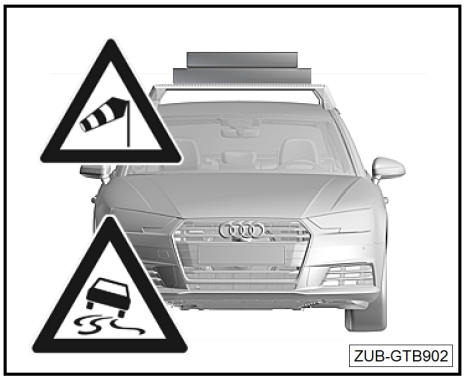

2.4 Safety notes for loading

2.4.1 Permissible roof load and loading

WARNING

The maximum permissible roof load of 90 kg (198 lbs.) must not be exceeded – risk of accident!

The maximum permissible gross vehicle weight rating of carrier units, roof rack modules and load of 90 kg (198 lbs.). is to be observed.

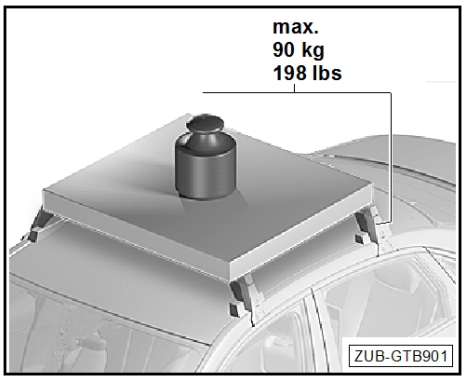

2.4.2 Loading the roof load in the correct manner for the load in question

> ⚠ ***WARNING***
>
> ***Load the roof load onto the carrier units in the correct manner for the load in question – risk of accident!***
>
> ***Avoid loading on one side – risk of accident!***

2.4.3 Width of load

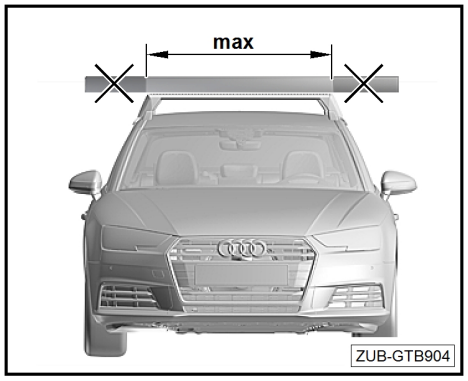

> ⚠ ***WARNING***
>
> ***The load must not protrude past the edges of the carrier units to the left or right – risk of accident!***
>
> ***Avoid loading on one side – risk of accident!***

2.4.4 Tensioning carrier units

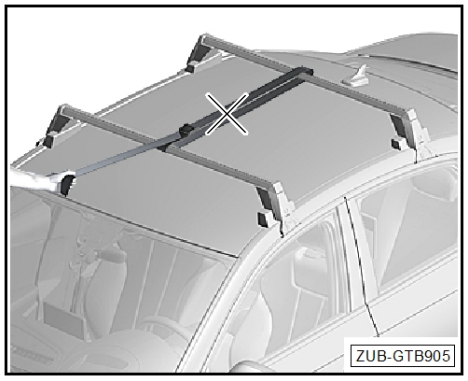

> ⚠ ***WARNING***
>
> ***Do not tension carrier units against each other – risk of accident!***

2.4.5 Installation and loading sequence for carrier units

> ⚠ ***WARNING***
>
> ***Only fit the add-on components -B- once the carrier units -A- have been installed on the vehicle – risk of accident!***

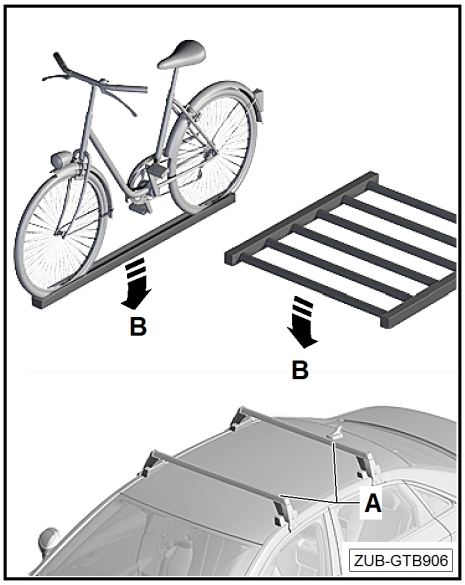

2.4.6 Rear lid opening range

Caution

To prevent damage to the vehicle, make sure that the rear lid is opened carefully after longer objects have been loaded onto the vehicle. For vehicles featuring automatic rear lid operation, it is recommended that you adjust the opening angle as required ⇒ Vehicle Owner's Manual.

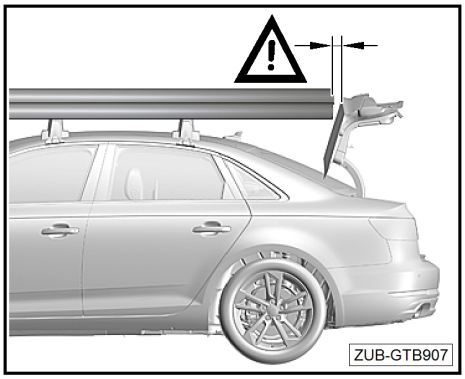

2.4.7 Opening area of the sliding/tilting sunroof and panoramic roof

Caution

The clearance above the sliding/tilting sunroof or tilting panoramic roof must be checked when installing the carrier units. If the roof rack modules are secured using assembly brackets, the sliding/tilting sunroof or tilting panoramic roof must not be opened – risk of damage resulting from a collision!

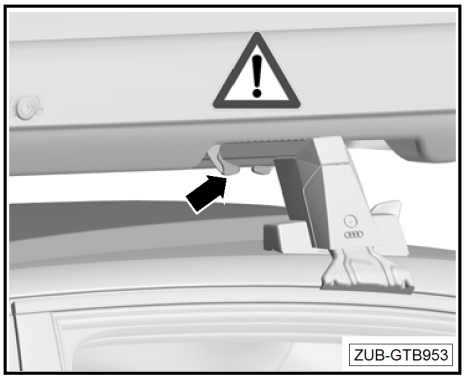

3 Scope of delivery and overview of components

3.1 Scope of delivery

Units	Description	Information
1	Front roof bars	Label on the underside in direction of travel left
1	Rear roof bars	Label on the underside in direction of travel left
2	Profile cover	Length: 1250 mm
1	4-Nm torque wrench	
2	Keys	
1	Fitting instructions	

3.2 Overview of components

1 - Profile cover (2x)

2 - Label (2x)
- ❑ "front left", "rear left"

3 - Profile tube (2x)

4 - Hexagon bolt M6 x 12 (8x)

5 - Washer M6 (8x)

6 - Profile cap (4x)

7 - Hinge wire (4x)

8 - Base bracket with reinforcing sheet metal (4x)

9 - Base bracket bolt (4x)

10 - Cover flap (4x)

11 - Lock (4x)

12 - Key (2x)

13 - Claw fastener bolt (4x)

14 - Tensioning bolt (4x)

15 - Claw fastener (4x)

16 - Circlip (4x)

17 - Bolts (8x)

18 - Base support with roof support (4x)

19 - Base support cover (4x)

20 - Cover (4x)

21 - 4-Nm torque wrench (1x)

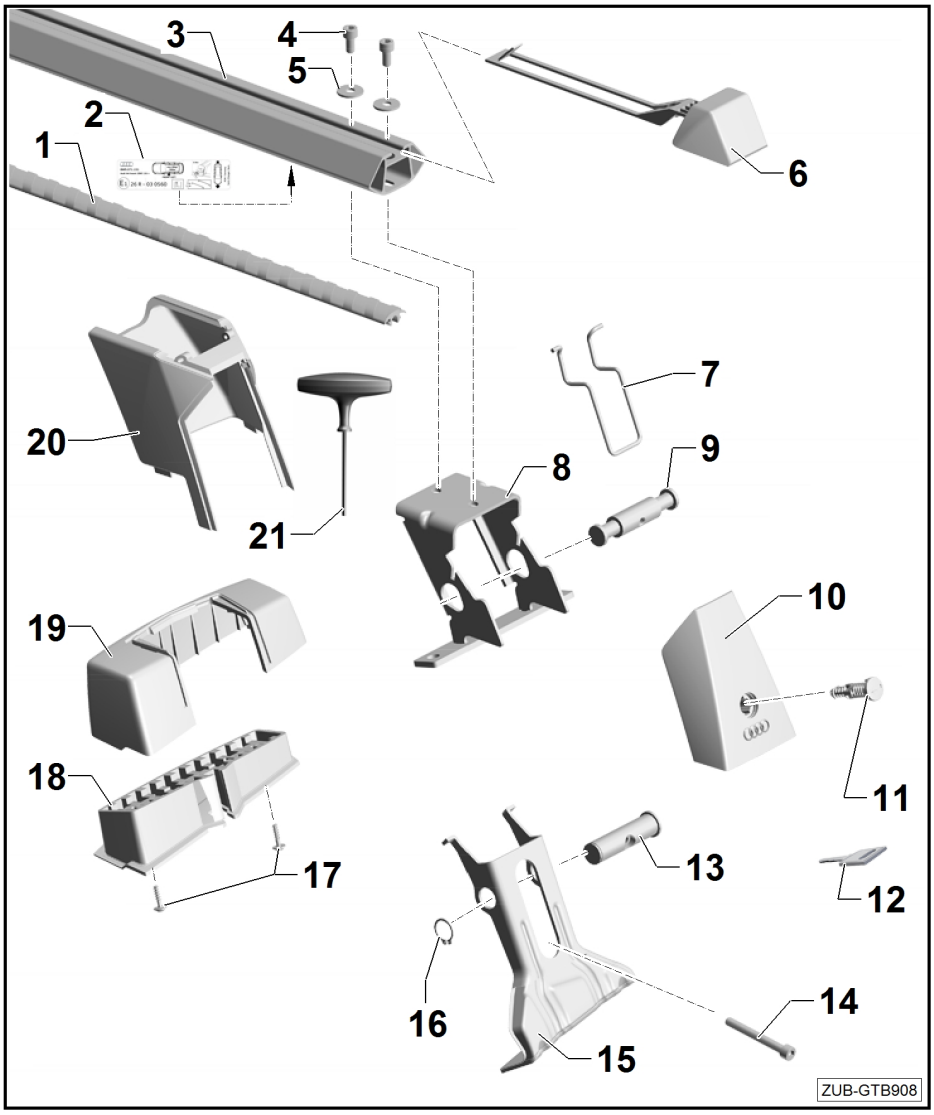

4 Installing/removing carrier units on the vehicle

4.1 Installing carrier units on the vehicle

Preparing carrier units for installation:

– Open the lock -14- using the key -13-.

– Note the key number of your roof bars. This will facilitate replacement in the event of loss.

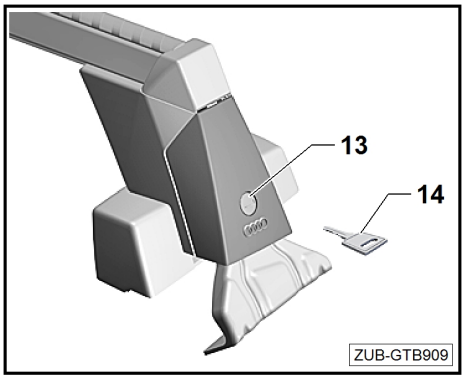

– Open the cover flaps -12-.

– Connect the torque wrench -25- to the bolts -16- and unscrew until obvious resistance is felt.

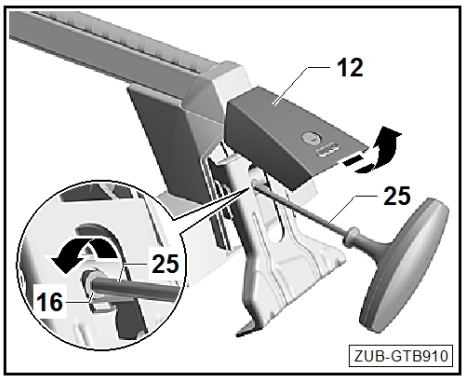

– Swivel out the claw fasteners -17- and hook the narrow end of the claw fasteners in the installation position on the base supports -24-.

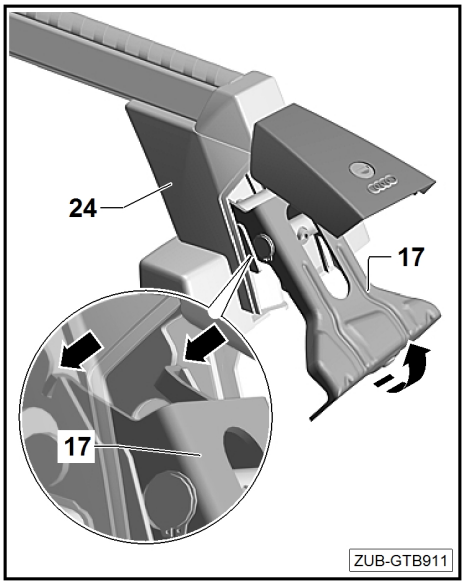

Preparing the vehicle for installation:

– Open the vehicle doors.

The mounting holes -X- are located on the undersides of the sidewall frame.

– Any soiling must be removed carefully.

◆ Clean the contact area between the vehicle roof and the roof bars thoroughly (they should be free from dust and grease).

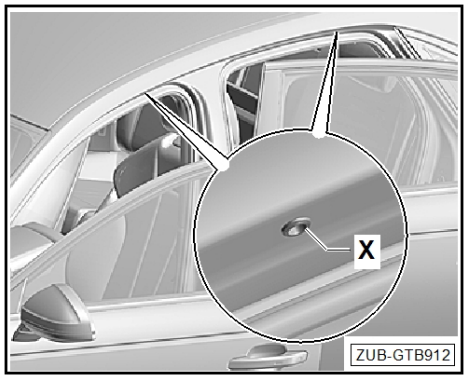

Installing carrier units:

– Carefully position both roof bars on the vehicle roof in the area of the mounting holes -X-. The claw fasteners must be in the installation position when positioning the roof bars. Observe the labels -24- on the underside of the profile tubes when positioning the roof bars.

Note

The labels on the underside of the profile tubes must be on the left-hand side of the vehicle and the printed arrow must point in the direction of travel.

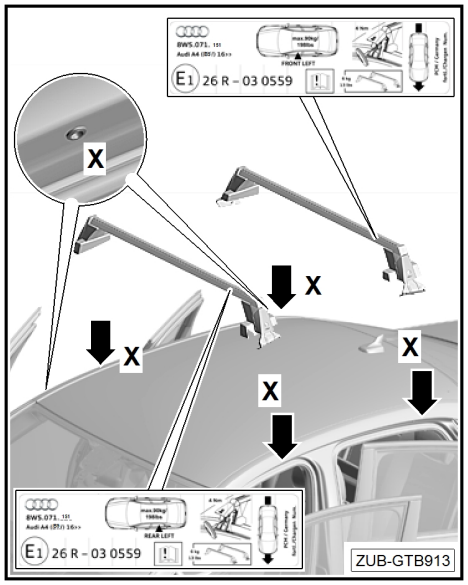

– Unhook the claw fastener -17- from the installation position on the base bracket -24- by pulling upward, then swivel down.

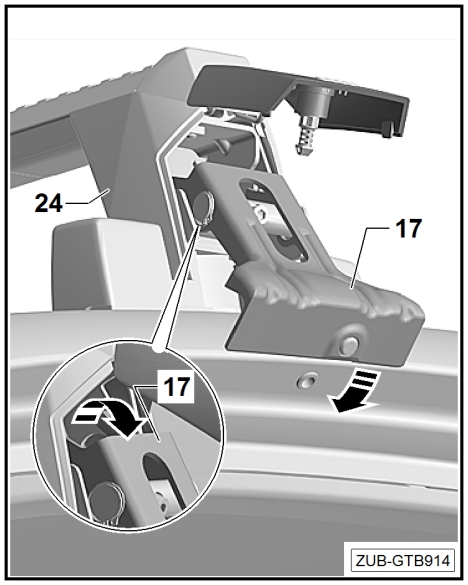

Check the exact installation position of the carrier unit – the positioning bolts of the claw fastener -17- must be positioned precisely below the mounting hole -arrow-. Move the roof bar forwards or backwards if necessary.

Carefully slide the claw fastener -17- upward so that the positioning bolts are inserted into the mounting hole; hold the claw fastener in this position.

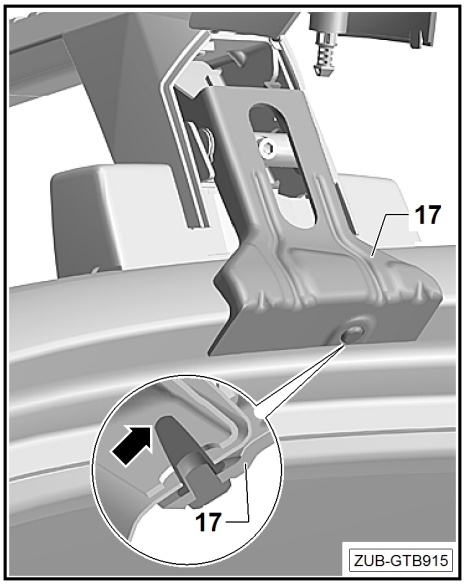

(!) *Caution*

The claw fastener installation bolt must be positioned precisely below the mounting hole.

If the claw fastener -17- will not easily slide upward, check the position of the roof bar and correct it.

Setting the roof bar width ⇒ **"Adjusting the carrier unit width" on page 13**

– Align the roof bar laterally — make sure it sits correctly on the roof edge -arrow-.

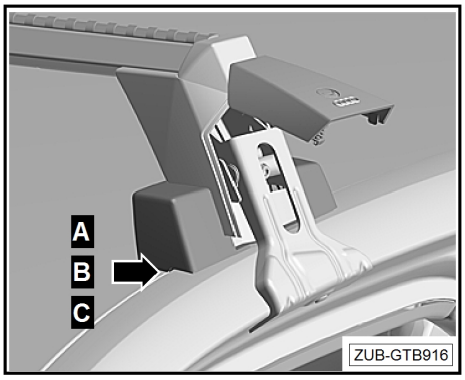

The gap -a- must not exceed 1 mm.

If the rubber supports on the base bracket housing are not flush to the surface, we recommend that you have the width adjustment checked and corrected by a qualified workshop. Adjusting the carrier unit width ⇒ **"Adjusting the carrier unit width" on page 13****. Install the carrier units before doing so.**

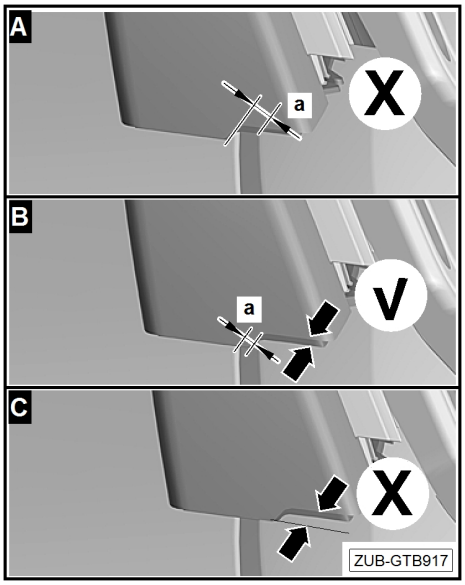

– Gently tighten the bolts -16- alternately using the torque wrench -25-.
– Check the position of the base bracket cover -24- and claw fastener -17- and correct if necessary.
– Tighten one tensioning bolt -16- after another using the torque wrench -25- until the torque wrench makes an audible clicking sound. This indicates that the correct tightening torque has been applied.
– Close the cover flap -12- and lock the lock with the key.
– Remove the key.
– Follow the same procedure to install the second roof bar.

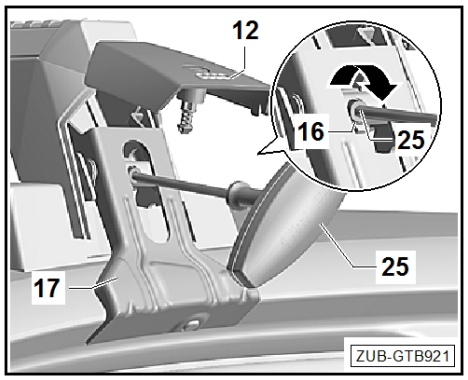

4.2 Installing add-on components

– Secure roof rack modules in accordance with the relevant installation instructions for the roof rack module in question.
– To install the add-on components, remove the profile cap -5- from the profile tube -2- -arrow A-.
– Insert the add-on components in the T groove -arrow B-.
– Slide the profile cap -5- back on -arrow C-.

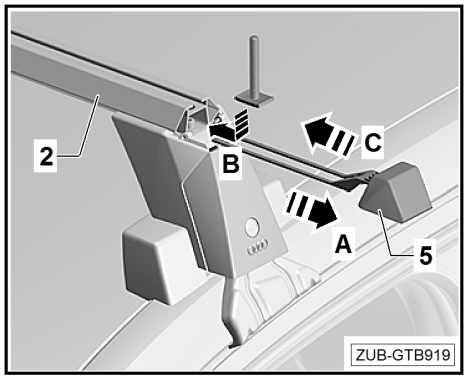

When the add-on components are not in use, secure the T groove with the profile cover -4-.

– Adjust the profile cover -1- to the length of the roof bars with the profile caps -5- closed.
– Place the profile cover -1- on the T groove on the carrier unit -2- and press the cover into the T groove -arrow-.

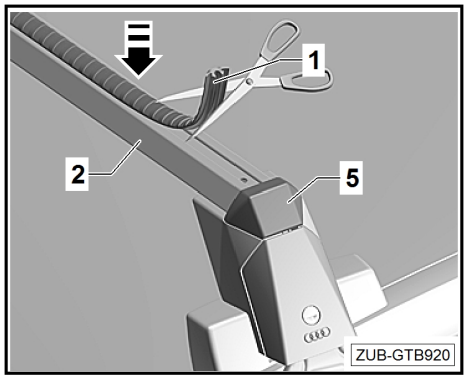

4.3 Removing the carrier units from the vehicle

– Remove the load and the add-on components.

– Open the lock using the key and open the cover flap -12-.
– Open the vehicle doors.
– Unscrew the left and right tensioning bolts -25- alternately using the torque wrench -16- until obvious resistance is felt.
– Slide the left and right claw fasteners -17- downward to the stop. The positioning bolts should no longer be in the mounting hole.

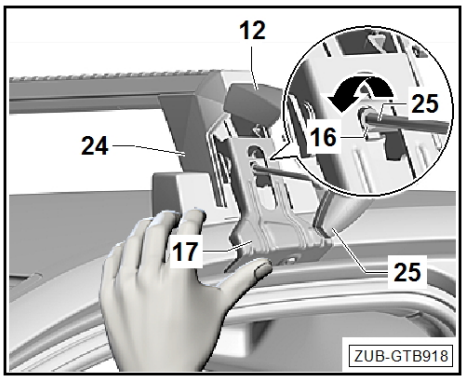

– Swivel the claw fasteners -17- upward and hook the narrow end into the installation position on the base bracket -24-.
– Remove the roof bars from the vehicle roof.
– Unhook the claw fasteners -17- from the installation position and swivel downward.
– Turn bolt approx. 10 times to screw in.
– Close the cover flap and lock the lock with the key.
– Remove the key.

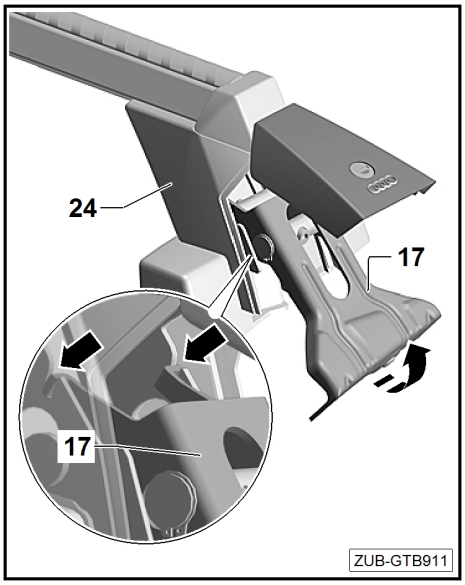

4.4 Maintenance instructions

Carrier units

The carrier units must always be cleaned and kept in good order. It is particularly important to remove any dirt and salt in the winter.

The carrier units can be cleaned using water.

Locks

The locks must be maintained after several locking cycles have passed, and always after wet cleaning has been performed. This process involves spraying the dust/dirt guard and the inside of the cylinder with an appropriate lubricant and then actuating the lock several times using the key.

> ⚠ ***WARNING***
>
> ***Do not use any lubricants on the bolted connections.***
>
> ***Failure to comply with these instructions may result in the carrier units becoming detached, causing injury to you or others and/or damage to property.***

Caution

Do not use a high-pressure cleaner to clean the kayak holders.

4.5 Technical notes

Technical data

Dead weight of carrier unit set: approx. 6 kg (13 lbs.).

Roof load/load

To determine the roof load:	
	Weight of the carrier unit
+	weight of the roof rack module
+	weight of the load
=	roof load

WARNING

Never exceed:

- ***the maximum permissible roof load (90 kg/198 lbs.),***
- ***the gross axle weight rating,***
- ***the gross vehicle weight rating for the vehicle ⇒ Vehicle Owner's Manual.***

4.6 Adjusting the carrier unit width

Note

- *Each carrier unit is pre-adjusted by the manufacturer in line with your vehicle's requirements.*
- *If the carrier units are not correctly adjusted, the correct basic setting must be made by a qualified workshop.*

Instructions for the qualified workshop if the position of the support bracket for the relevant vehicle is not set correctly.

– Install the carrier units on the vehicle

– Lift the profile cap approx. -2 cm - from the profile tube -A- to access the hexagon bolts.

– Use a hexagon socket wrench -B- (5 mm) to unscrew the hexagon bolt -3- on the right-hand support bracket far enough that the support bracket can be moved. The carrier unit remains on the vehicle roof during this process.

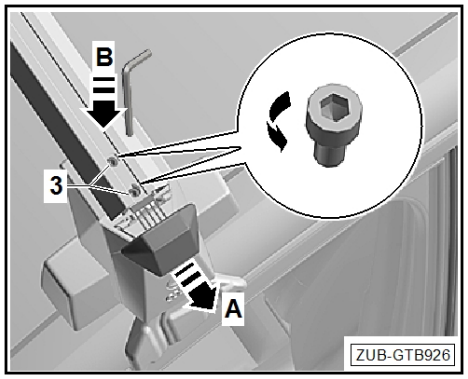

– Adjust the roof bar so that the rubber support on the right-hand support bracket housing sits flush with the roof edge -arrow-.

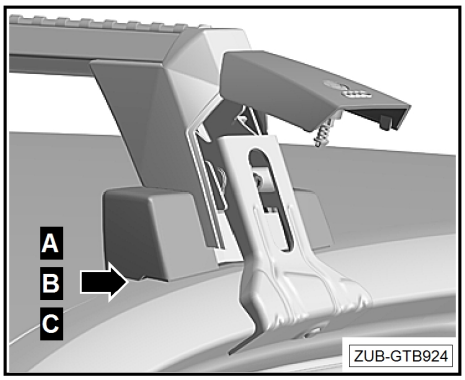

The gap -a- must not exceed 1 mm.

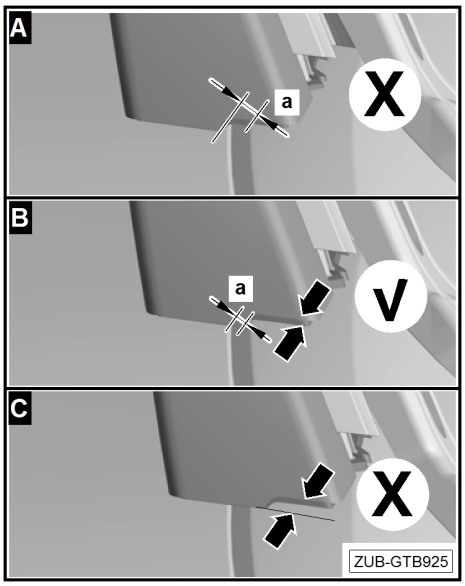

– Use a hexagon socket wrench -A- (5 mm) to tighten the hexagon bolt -3- to 8 Nm.
– Push the profile cap back into the profile tube -B-.
– Repeat the procedure on the other roof bar if necessary.

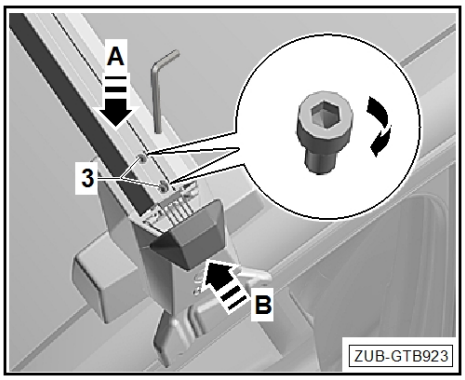

⚠ ***WARNING***

Check that all hexagon bolts have been tightened (8 Nm). If these guidelines are not observed, this can result in the carrier units becoming loose or falling off – risk of accident!

Do not use the supplied torque wrench (4 Nm).