EN

Installation instructions

Bicycle rack

For scope of delivery 80A.071.128
Audi Genuine Accessories®

Edition 01

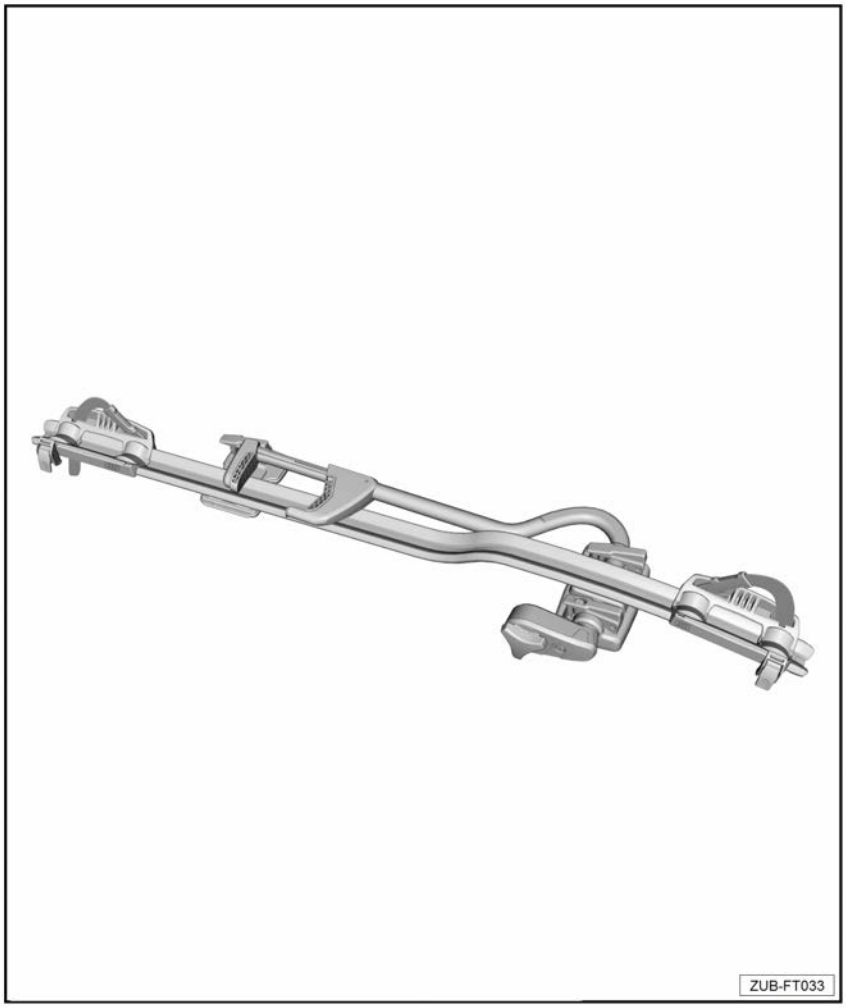

Contents

1 General notes **1**

2 Safety notes **2**

3 Scope of delivery and overview of components **6**

3.1 Overview of components 6

4 Bicycle rack basic installation **7**

5 Installing/removing the bicycle rack and bicycle **9**

5.1 Installing the bicycle rack on the roof bars 9

5.2 Removing the bicycle rack from the roof bars 10

5.3 Installing the bicycle on the bicycle rack 10

5.4 Removing the bicycle from the bicycle holder 13

6 Additional installation work **14**

6.1 Changing the installation direction to make it easier to secure the bicycle on the left-hand side of the vehicle 14

6.2 Checking the installation of the retainer 14

6.3 Maintenance instructions 15

All rights reserved.
No reproduction without prior agreement from publisher.

Copyright © 2019 Audi AG, Ingolstadt

Printed in Germany

1 General notes

Please read these instructions carefully and note the WARNING, Caution and Note descriptions before installing the bicycle rack.

WARNING

Text with this symbol contains information concerning your safety and indicates potential accident and injury risks.

Caution

Text with this symbol indicates the risk of damage to your vehicle.

Note

Text with this symbol contains additional information.

AUDI AG shall not accept responsibility in the event of failure to comply with these installation instructions.

2 Safety notes

⚠ ***WARNING***

The procedures and safety notes detailed in these instructions for the installation, handling and use of the bicycle rack must always be observed.

- ***Deviating from these instructions even slightly can cause the bicycle rack or the mounted bicycle to come loose.***
- ***The bicycle rack is designed such that the vehicle will not be damaged if components are installed, handled and used properly.***
- ***The manufacturer is not liable for any damage resulting from failure to comply with the installation procedure or notes specified.***
- ***All forms of warranty claim against the manufacturer are invalidated if installation, handling or use of the components is not carried out as specified in these instructions.***

⚠ ***WARNING***

The bicycle rack for the roof bars is only suitable for transporting bicycles.

- ***Replace damaged components immediately.***
- ***Do not use elasticated straps or bungee cords!***

Key number

– Note the key number of your bicycle rack here. This will facilitate replacement in the event of loss.

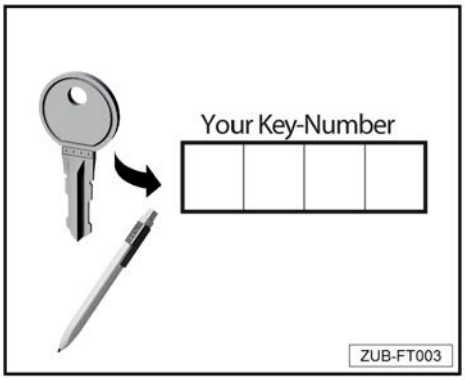

Note

Store the description and key in the glove compartment!

Roof load and bicycle rack load

⚠ ***WARNING***

Never exceed

- ***the maximum permissible roof load,***
- ***the gross axle weight rating,***
- ***and the gross vehicle weight rating***

for your vehicle ⇒ Vehicle Owner's Manual – Risk of accident!

The bicycle rack may be loaded with a single bicycle weighing up to 20 kg (44.1 lbs).

Calculating the roof load	
Carrier units	approx. 7.0 kg (15.4 lbs)
+	
Bicycle rack	4.2 kg (9.3 lbs)
+	
Bicycle (max. 20 kg [44.1 lbs] per bicycle)	x kg (lbs)
+	
Other roof loads	x kg (lbs)
=	
≤ Max. roof load	⇒ Vehicle Operating Manual

EN

Sensitivity to side winds

Using the bicycle rack alters how the vehicle handles. The effect of side winds on the vehicle increases and turning and braking performance are affected.

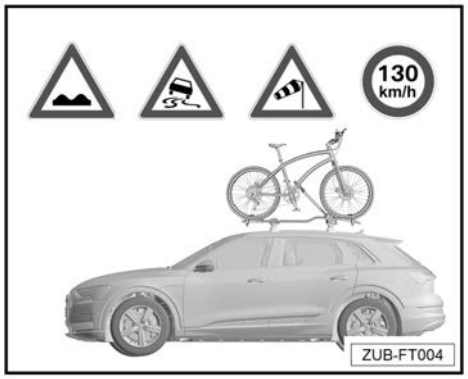

⚠ ***WARNING***

The driving and braking behaviour and the vehicle's sensitivity to side winds are changed due to roof load. Adapt your driving style accordingly – risk of accident!

It is recommended that you do not exceed 130 km/h (81 mph).

When driving in strong side winds, make sure that you take extra care:

- ***when moving into and out of the slipstreams of lorries***
- ***when driving past hedgerows, trees, walls and buildings as well as any other wind barriers,***
- ***when driving over bridges***

Vehicle height

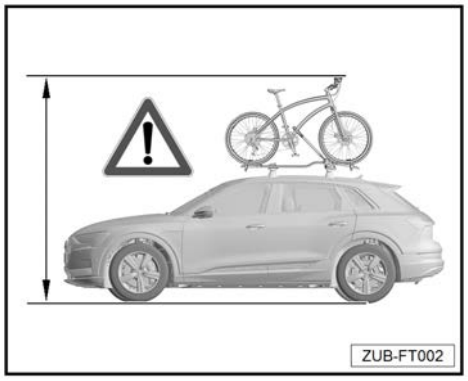

⚠ ***WARNING***

Note the altered vehicle height. Pay particular attention to:

- ***Low-hanging branches***
- ***Passages with reduced head-room clearance***
- ***Entrances to garages with reduced head-room clearance***
- ***Height restrictions posed by multi-storey car parks, underground car parks, bridges, tunnels and underpasses.***

Load — room to open boot lid

Caution

To prevent damage to the vehicle, make sure that you open the boot lid carefully when installing the bicycle rack. For vehicles featuring automatic boot lid operation, it is recommended that you adjust the opening angle as necessary ⇒ Vehicle Owner's Manual.

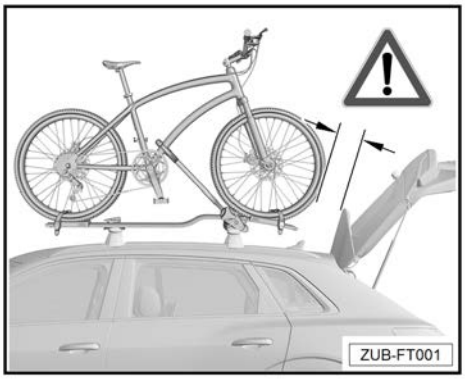

Car wash

Caution

Do not enter a car wash with roof bars installed, with or without a bicycle rack.

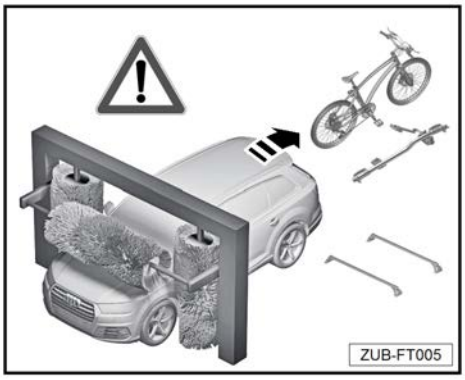

Loading bicycles on the vehicle

– When loading more than one bicycle, attach the bicycles so that they face in opposite directions.

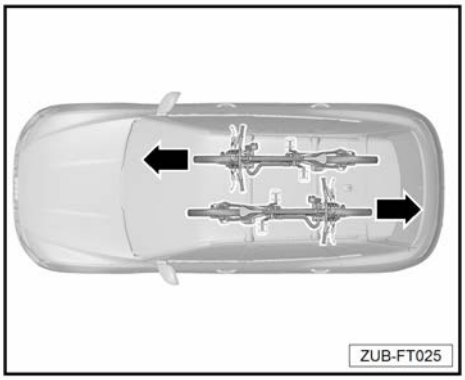

General safety notes

WARNING

Please read these assembly instructions carefully before starting installation. Non-compliance with these installation instructions and safety notes will compromise your safety and that of third parties.

WARNING

All bolt connections and connections for the roof bars and for the add-on components must be checked prior to travelling to make sure they are positioned and installed correctly. Tighten if necessary.

Recheck bolted connections and connections at appropriate intervals and tighten if necessary. The bolted connections and connections must be checked at short intervals if travelling on a poor stretch of road.

If these guidelines are not observed, this can result in the carrier units or the roof rack modules becoming loose or falling off – risk of accident!

WARNING

For the safety of other road-users, the roof bars and any add-on components must be removed from the vehicle when they are not being used.

WARNING

Repairs or the replacement of parts must only be performed by a qualified workshop. It is recommended that genuine spare parts available from your Audi partner are used.

Caution

Do not enter a car wash with roof bars with/without add-on components installed.

Note

Driving with the bicycle rack attached can cause increased wind noise.

Note

- *Observe the relevant statutory regulations for using bicycle racks in other countries.*
- *Remove the bicycle rack when it is not in use.*
- *We reserve the right to make technical changes.*

3 Scope of delivery and overview of components

Quantity	Component
1	Bicycle rack
2	Keys
2	Long T groove screw[1)]
1	Short T groove screw[1)]
2	Tensioning lever without lock[1)]
3	Bolt with internal thread[1)]
2	Tensioning belt[1)]
2	Rim protector[1)]

[1)] Contents of plastic bag

3.1 Overview of components

1 - Wheel mount (2x)
2 - Fastener (1x)
3 - Retainer (1x)
4 - Key (2x)
5 - Tightener (4x)
6 - Movable bearing (rear) (1x)
7 - Support bar (1x)
8 - Rotary knob (quick-clamp function) (1x)
9 - Tensioning lever with lock (1x)
10 - Base (1x)
11 - Tensioning belt (2x)
12 - Rim protector (2x)
13 - Long T groove screw (1x)
14 - Bolt with internal thread (3x)
15 - Short T groove screw (2x)
16 - Tensioning lever without lock (2x)

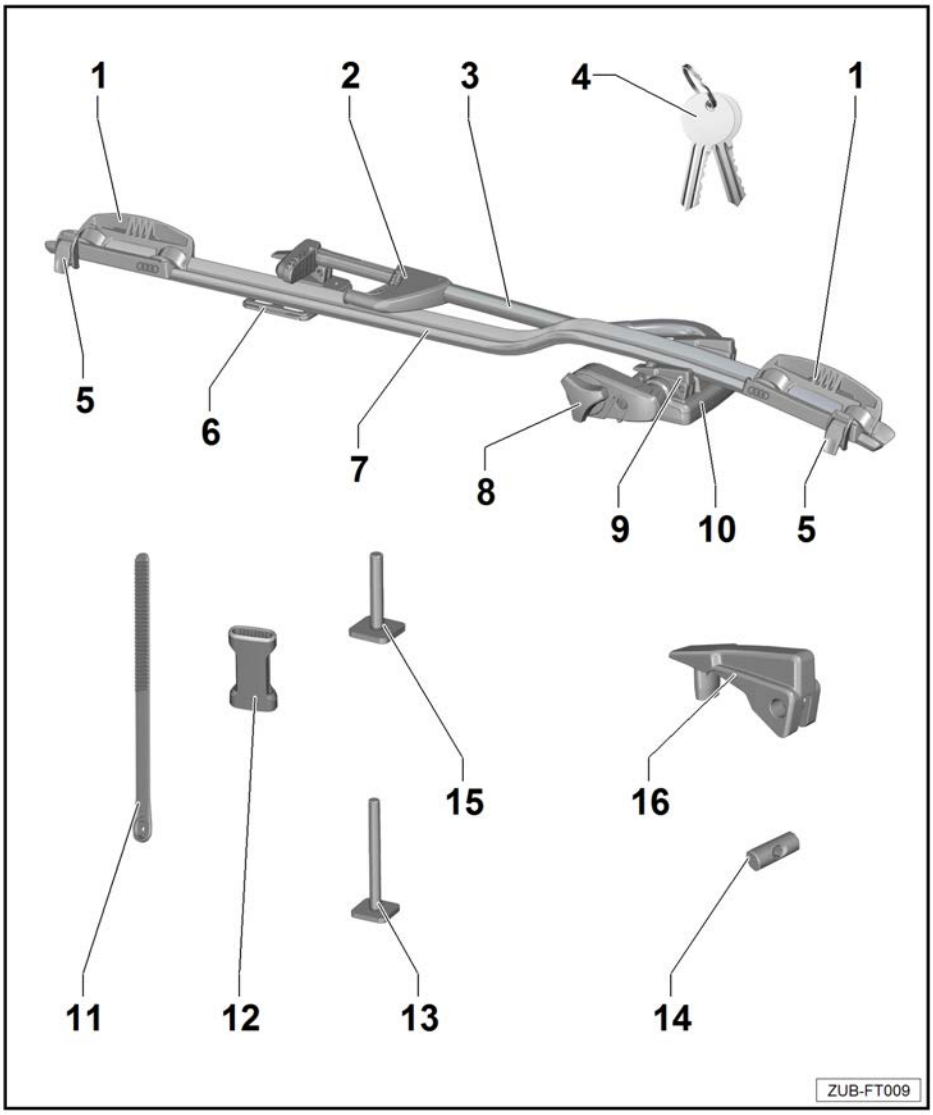

4 Bicycle rack basic installation

> ⚠ ***WARNING***
>
> ***With some vehicle models, the bicycle rack may only be installed facing towards the front of the vehicle. Please refer to the installation instructions for the roof bars in question — risk of accident!***

– Prior to installation, check that you have all the components from the scope of delivery.

– Use the key -4- provided to open the lock on the tensioning lever with lock; then remove both the tensioning lever -9- and the lock.

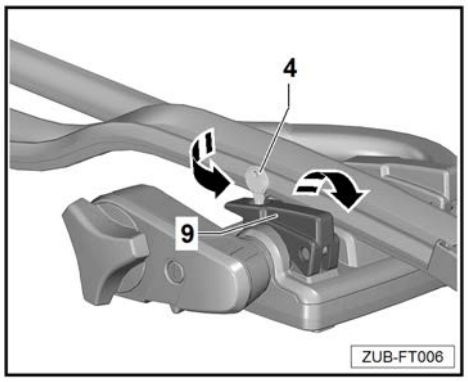

– Insert the bolts with internal thread -14- into the tensioning lever with lock -9- and the tensioning lever without lock -16- (2x).

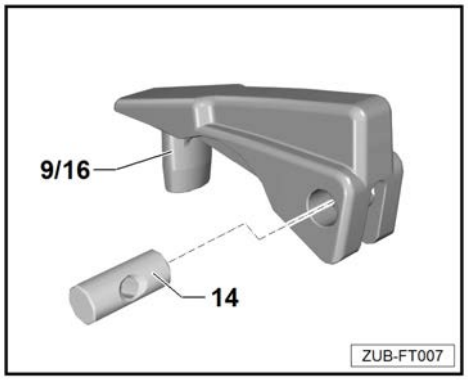

– Route the short T groove screw -15- through the bore hole -A- in the movable bearing (rear) -6- from underneath and tighten the tensioning lever without lock -16- by between one and three turns.

– Route the long T groove screw -13- through the bore holes -B- in the base from underneath and tighten the tensioning lever without lock -16- by between one and three turns.

– Route the long T groove screw -13- through the bore holes -C- in the base from underneath and tighten the tensioning lever with lock -9- by between one and three turns.

> ***Note***
>
> *Mount the tensioning lever with lock to the side angled towards the rotary knob.*

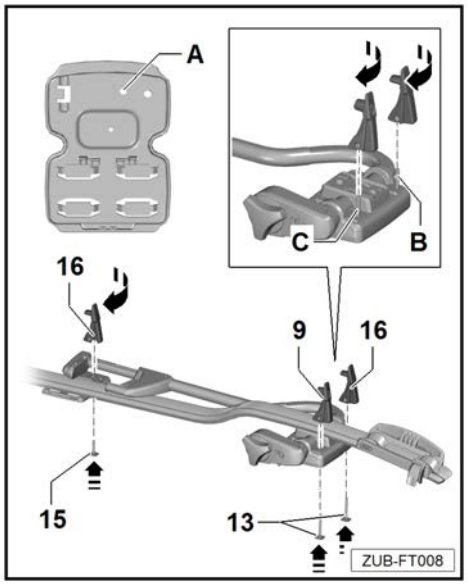

– Push the tensioning belt -11- as far as it will go through the front wheel mount -1- from underneath (the smooth side of the tensioning belt should be facing the support bar).
– Place the rim protector -12- on the tensioning belt -11- from above.
– Bend the tensioning belt -11- towards the rear and insert it in the tensioning belt holder -D- on the wheel mount -1-.

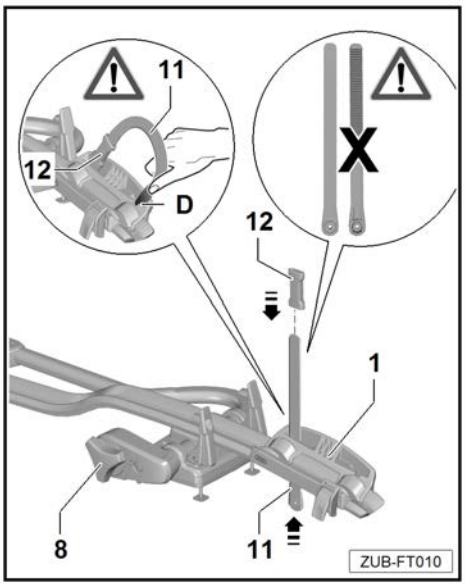

– Push the tensioning belt -11- as far as it will go through the rear wheel mount -1- from underneath (the smooth side of the tensioning belt should be facing the support bar).
– Place the rim protector -12- on the tensioning belt -11- from above.
– Bend the tensioning belt -11- towards the rear and insert it in the tensioning belt holder -D- on the wheel mount -1-.

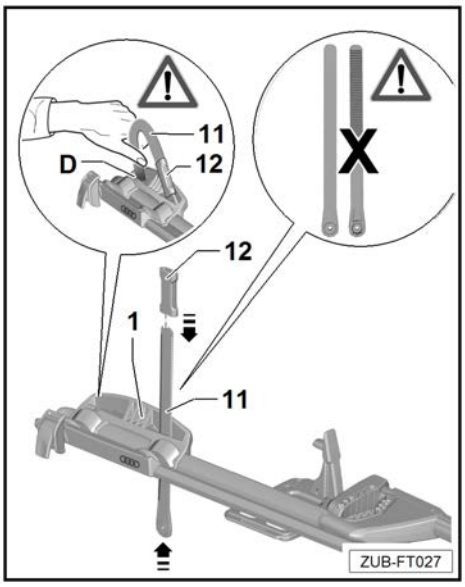

5 Installing/removing the bicycle rack and bicycle

5.1 Installing the bicycle rack on the roof bars

Note

The bicycle rack as supplied from the factory is designed for installation on the right-hand side of the vehicle. To install the bicycle rack on the left-hand side of the vehicle, the bicycle rack can be modified ⇒ "Changing the installation direction to make it easier to secure the bicycle on the left-hand side of the vehicle" on page 14.

– Set the appropriate distance between the individual roof bars -arrow a- by adjusting the movable bearing (rear) -6-.

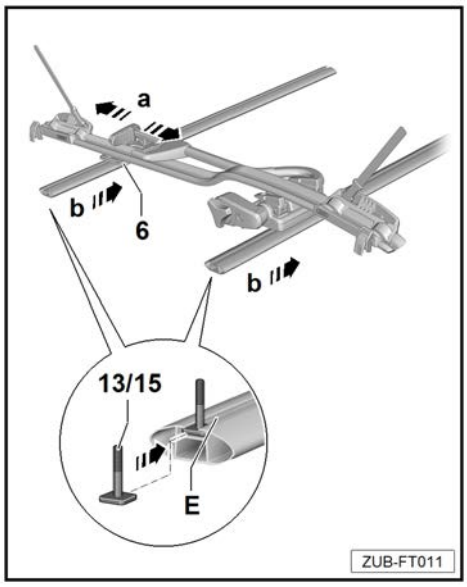

> ⚠ ***WARNING***
>
> ***Make sure that the T groove screws -13- and -15- (2x) are inserted fully into the grooves -E- – risk of accident!***

– Insert the bicycle rack T groove screws -13- and -15- in the grooves -E- on the roof bars and slide the bicycle rack into the required position parallel to the roof bars -arrows b-.

– Align the bicycle rack such that the locating pins on the base -arrow- slot into the T groove on the roof bars.

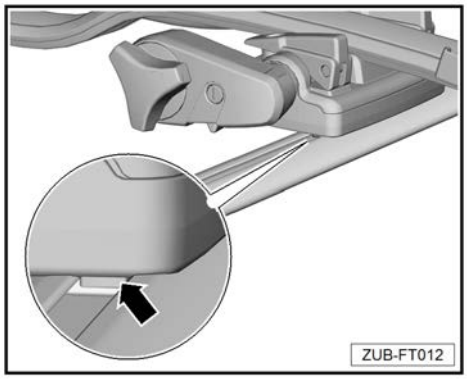

> ⚠ ***WARNING***
>
> ***The locating pins -arrow- must be positioned in the T groove on the roof bars when the tensioning lever is tightened; otherwise they could work loose and parts might be lost — risk of accident!***

– Rotate the three tensioning levers clockwise through 10 to 12 turns -arrow a-.
– Exert pressure -arrow c- to close the tensioning lever.

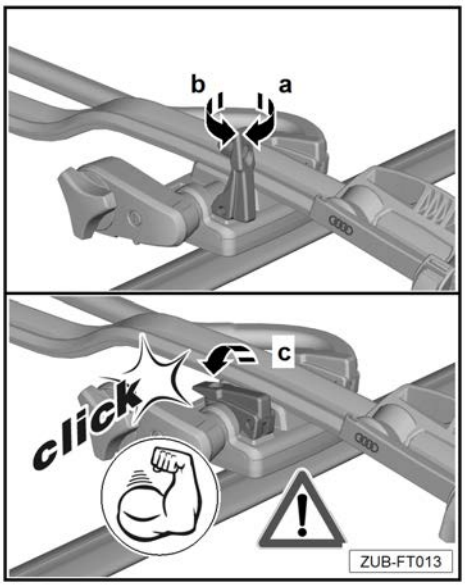

Caution

If you do not exert sufficient pressure when closing the tensioning lever, the bicycle rack will not be securely seated and may work loose!

- If the tensioning lever in question cannot be closed, rotate it anticlockwise through one turn -arrow b- and then exert pressure to close it -arrow c-.
- If the tensioning lever in question can be closed without exerting pressure, rotate it clockwise through one turn -arrow a- and then exert pressure to close it -arrow c-.

– Use the key -4- provided to close the lock on the tensioning lever -9-.

Load — room to open boot lid

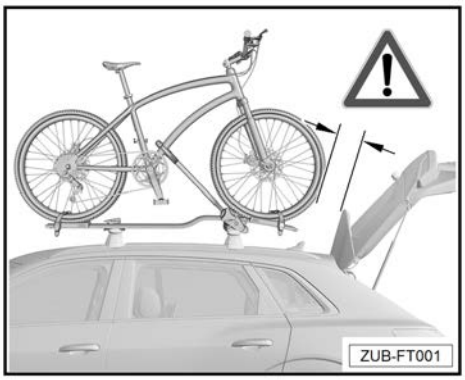

Caution

To prevent damage to the vehicle, make sure that you open the boot lid carefully when fitting add-on components (such as a roof box, bicycle rack etc.) and when transporting long items. For vehicles featuring automatic boot lid operation, it is recommended that you adjust the opening angle as necessary ⇒ Vehicle Owner's Manual.

5.2 Removing the bicycle rack from the roof bars

– The bicycle rack can be removed by following the above steps in reverse order.

5.3 Installing the bicycle on the bicycle rack

WARNING

Remove child seats and loose objects such as drinks bottles and saddle bags before loading.

Do not cover bicycles with tarpaulins, protective covers or any other covers.

Item	a	b
-1-	Min. 22 mm; max. 80 mm	Min. 22 mm; max. 100 mm
-2-	Min. 22 mm; max. 80 mm	

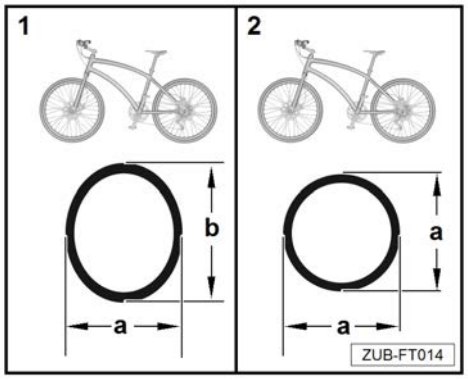

Permissible frame sizes

– Use the key -4- provided to open the lock on the rotary knob -8-.
– Swivel the retainer -3- upwards -arrow a-.
– Place the bicycle carefully on the bicycle rack and hold it in place.

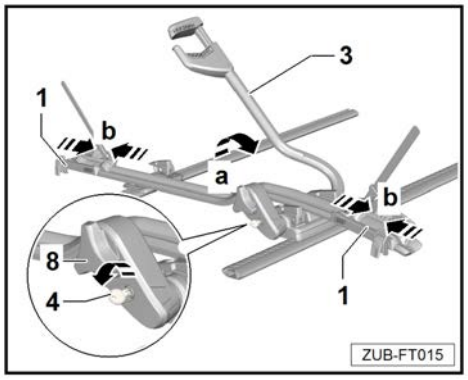

– Position the fastener -2- on the down tube -F- of the vehicle frame in the vicinity of the chain wheel -G-.

Caution

The fastener -2- on the retainer -3- must be located as close as possible to the chain wheel -arrow-.

Position the down tube -F- in the centre of the fastener -2- on the retainer -3-.

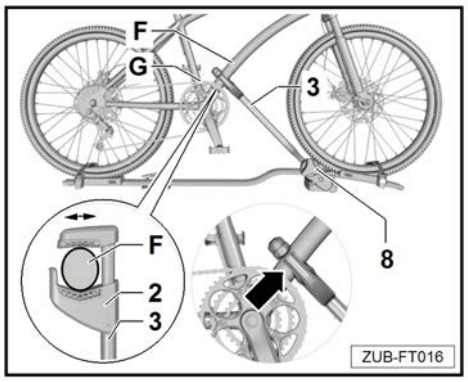

– Turn the rotary knob -8- to the right until the fastener -2- holds the down tube -F- gently in place.
– Align the wheel mounts -1- vertically below the wheel hubs -H-.
– Turn the rotary knob -8- to the right as far as it will go.
– Route the tensioning belt -11- between the spokes and over the wheel rim. The rim protector -12- must be positioned centrally over the rim.

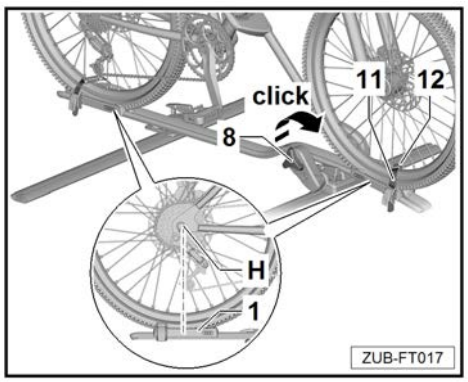

– Insert the tensioning belt -11- in the tightener -5- and align it centrally.

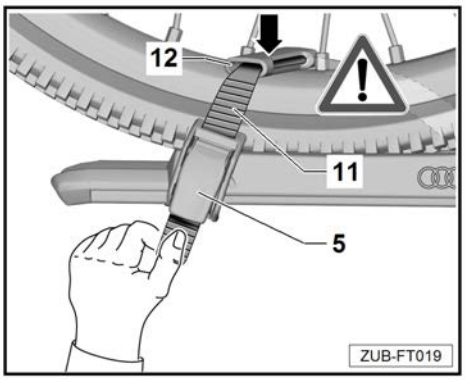

Caution

Ensure that there is a gap between the tensioning belt -11- and the roof of the vehicle — risk of roof damage!

– Tighten the tensioning belt -11- evenly on each side.

– Install the second tensioning belt -11- following the same procedure.

– Shake the bicycle to check that it is securely seated.

– Use the key -4- provided to close the lock on the rotary knob -8-.

WARNING

Check that the bicycle rack and the bicycle to be transported are securely attached:

- ***Before the start of every journey,***
- ***After approx. 10 km of the journey,***
- ***Approx. every 500 km on good roads,***
- ***Frequently on poor roads (due to vibration),***
- ***Regularly to make sure that there has been no movement/displacement.***

If the bicycle rack and bicycle are not checked to make sure that they are secure and to check whether any fixtures need tightening, they could work loose and parts might be lost, even if installation was carried out properly — risk of accident!

Observe the safety notes for the bicycle rack ⇒ "Safety notes" on page 2.

– Calculate the new height of the vehicle with the bicycle attached.

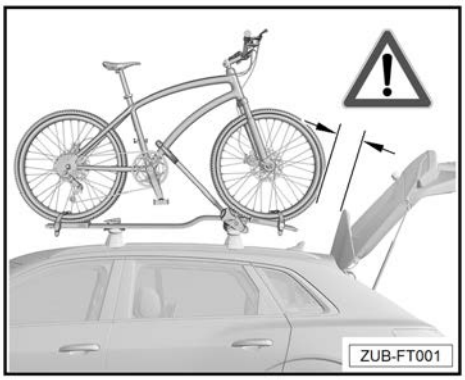

WARNING

Note the altered vehicle height. Pay particular attention to:

- ***Low-hanging branches***
- ***Passages with reduced head-room clearance***
- ***Entrances to garages with reduced head-room clearance***
- ***Height restrictions in multi-storey car parks and underground car parks.***

5.4 Removing the bicycle from the bicycle holder

– Open the tighteners -5- and then bend the tensioning belt -11- towards the rear and insert it in the tensioning belt holder -D- on the wheel mount -1-.
– Use the key -4- provided to open the lock on the rotary knob -8-.
– Hold the bicycle in place and press the lever -I- under the rotary knob -8- -arrow a- to open the fastener -2- on the retainer -3- -arrow b-.
– Remove the bicycle carefully from the bicycle rack.

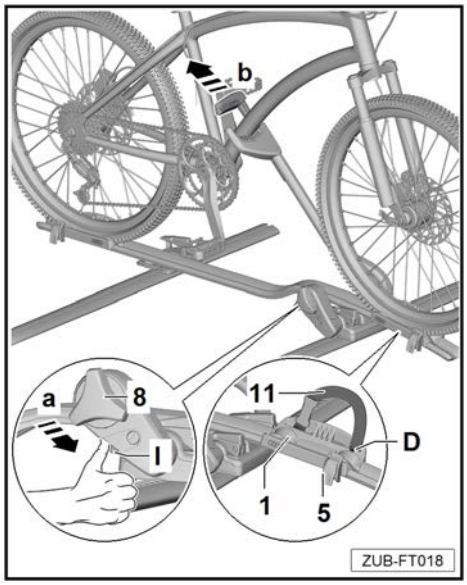

– Once the bicycle has been removed, push the rear wheel mount -1- forwards -arrow A-until the retainer -3- can be supported.
– Swivel the retainer -3- downwards -arrow B- and place it on the wheel mount -1-.

Caution

Ensure that there is a gap between the tensioning belt -11- and the roof of the vehicle — risk of roof damage!

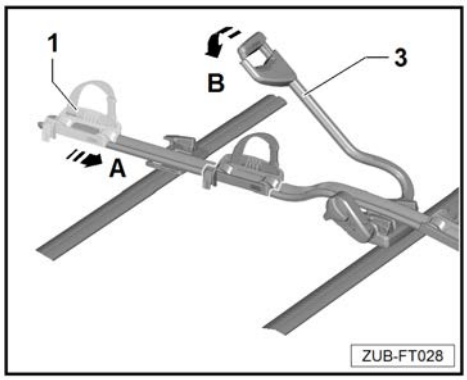

– Route the tensioning belt -11- over the retainer -2-, align it centrally and insert it in the tightener -5- to secure the retainer.
– Insert the front tensioning belt -11- in the tightener -5- and align it centrally.

Caution

Ensure that there is a gap between the tensioning belt -11- and the roof of the vehicle — risk of roof damage!

– Tighten the tensioning belt -11- evenly on each side.

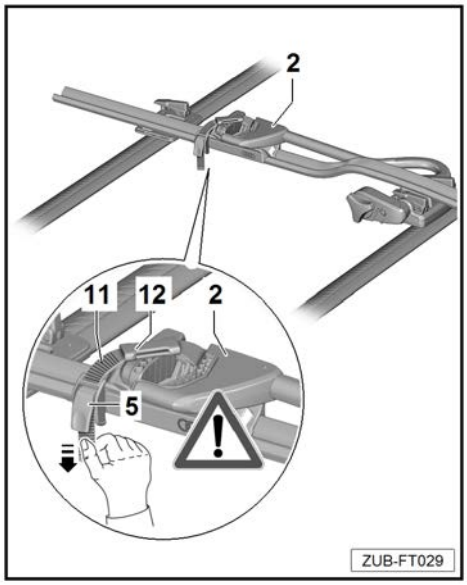

6 Additional installation work

The additional installation work requires technical skill and special tools. It is therefore recommend that the work be carried out by an Audi partner or a qualified workshop.

6.1 Changing the installation direction to make it easier to secure the bicycle on the left-hand side of the vehicle

◆ Work is carried out with the bicycle rack removed.

– Remove the end pieces -J- from the ends of the support bar -7-. Remove the wheel mounts -1- and the movable bearing (rear) -6- -direction of the arrow-.

– Rotate the bicycle rack.

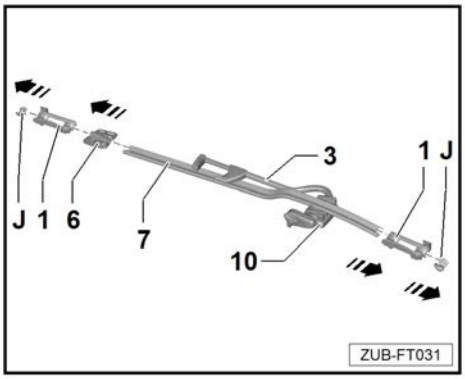

– Using a screwdriver, loosen the plugs -magnifying glass-.

– Remove the base and rotate it 180°.

– Swivel the retainer -3- into the new basic position.

– Using a screwdriver, tighten the plugs -magnifying glass-.

– Position the base such that dimension X = 250 mm from the end of the support bar.

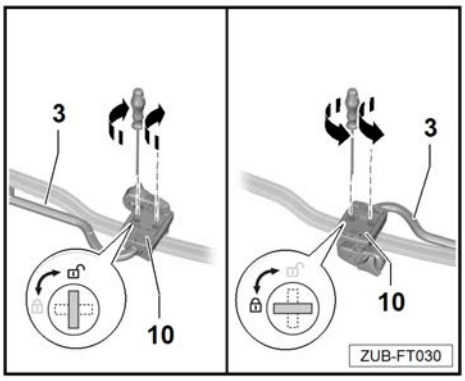

Caution

The base must be located beneath the bicycle rack in its swivelled position — risk of roof damage.

– Push the wheel mounts -1- onto the support bar -7-; the tallest side of the wheel mounts -1- should be located on the side angled away from the rotary knob.

– Place the end pieces -J- on the ends of the support bar -7-.

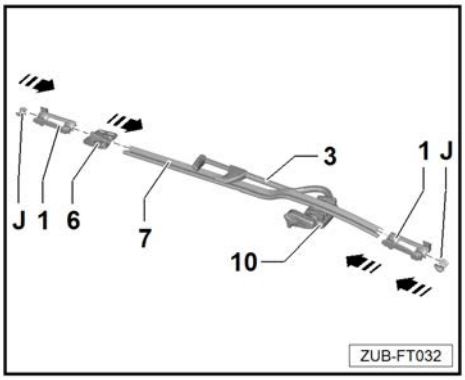

6.2 Checking the installation of the retainer

◆ Work is carried out with the bicycle rack removed.

– Rotate the bicycle rack.

– Tighten the 5-mm hexagon screws -arrows- such that the clamping force is sufficient but the retainer can still be adjusted.

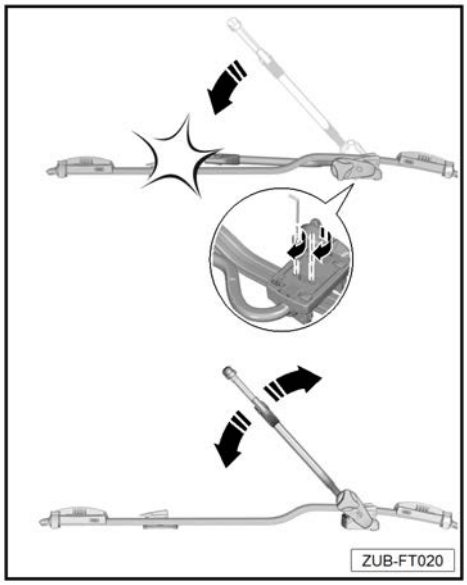

6.3 Maintenance instructions

⚠ ***WARNING***

Do not use any lubricants on the bolted connections.

Failure to comply with these instructions may result in the bicycle rack becoming detached, causing injury to you or others and/or damage to property.

ⓘ ***Caution***

Do not use a high-pressure cleaner to clean the kayak holders.

Bicycle rack

The bicycle rack must be cleaned regularly and kept in good order. It is particularly important to remove any dirt and salt in the winter. The bicycle rack can be cleaned with water.

Locks

The locks must be maintained after several locking cycles have passed, and always after wet cleaning has been performed. This process involves spraying the dust/dirt guard and the inside of the cylinder with an appropriate lubricant and then actuating the lock several times using the key.