Installation instructions

Audi A6 2018 ►
Audi A7 2018 ►
Pedal covers/foot rest

Audi Genuine Accessories®

Edition 01

EN

Contents

1	**General notes**	**1**
2	**Scope of delivery and overview of components**	**2**
3	**Sequence of operations**	**3**
3.1	Required special tools, testing instruments, measuring instruments and auxiliary devices	3
3.2	Removing and installing the pedal covers on the accelerator and brake pedals (left-hand drive vehicles)	4
3.2.1	Removing the pedal covers	4
3.2.2	Automatic gearboxes: Installing the pedal covers on the brake and accelerator pedals	4
3.3	Removing and installing the pedal covers on the accelerator and brake pedals (right-hand drive vehicles)	5
3.3.1	Removing the pedal covers	5
3.3.2	Automatic gearboxes: Attaching the pedal covers to the brake and accelerator pedals	5
3.4	Removing and installing the footrest	6
3.4.1	Automatic gearboxes: Removing the foot rest (left-hand drive vehicles)	6
3.4.2	Automatic gearboxes: Installing the foot rest (left-hand drive vehicles)	7
3.4.3	Automatic gearboxes: Removing the foot rest (right-hand drive vehicles)	7
3.4.4	Automatic gearboxes: Installing the foot rest (right-hand drive vehicles)	7

All rights reserved.
No reproduction without prior agreement from publisher.

Copyright © 2017 Audi AG, Ingolstadt

Printed in Germany

1 General notes

Please read these instructions carefully and note the WARNING, Caution and Note descriptions before the “pedal covers/ footrest” is installed.

> ⚠ ***WARNING***
>
> ***Text with this symbol contains information regarding safety and indicates potential accident and injury risks.***

Caution

Text with this symbol indicates the risk of damage to the vehicle.

Note

Text with this symbol contains additional information.

The pages that follow contain all of the information (subject to technical change) required to install and remove the pedal covers used in the vehicle.

Incorrect installation can cause damage to the pedal covers.

> ⚠ ***WARNING***
>
> ***The pedal covers must be installed by a specialist workshop.***
>
> - ***If the pedal cover is not installed correctly, it may cause the accelerator pedal to jam, resulting in hazardous driving conditions — risk of accident.***
> - ***If the pedal cover on the brake or accelerator pedal is loose, it may slip off the pedal in an emergency situation — risk of accident.***

Audi AG shall not accept responsibility in the event of failure to comply with these installation instructions.

EN

2 Scope of delivery and overview of components

Pedal covers (set) for automatic gearboxes in A6 and A7 left-hand drive vehicles without foot rest 4K1.064.205

Units	Part number	Description
1	8W1.723.173.A	Brake pedal cover
1	8W0.721.173	Accelerator pedal cover
1		Information sheet

Pedal covers (set) for automatic gearboxes in A6 and A7 left-hand drive vehicles with foot rest 4K1.064.205.A

Units	Part number	Description
1	8W1.723.173.A	Brake pedal cover
1	8W0.721.173	Accelerator pedal cover
1	4K1.864.777.A	Footrest
1		Information sheet

Pedal covers (set) for automatic gearboxes in A6 and A7 right-hand drive vehicles without foot rest 4K2.064.205

Units	Part number	Description
1	8W2.723.173	Brake pedal cover
1	8W0.721.173	Accelerator pedal cover
1		Information sheet

Pedal covers (set) for automatic gearboxes in A6 and A7 right-hand drive vehicles with foot rest 4K2.064.205.A

Units	Part number	Description
1	8W2.723.173	Brake pedal cover
1	8W0.721.173	Accelerator pedal cover
1	4K2.864.777.A	Footrest
1		Information sheet

3 Sequence of operations

3.1 Required special tools, testing instruments, measuring instruments and auxiliary devices

- Cleaning solution D.009.401.04
- Removal wedge -3409-

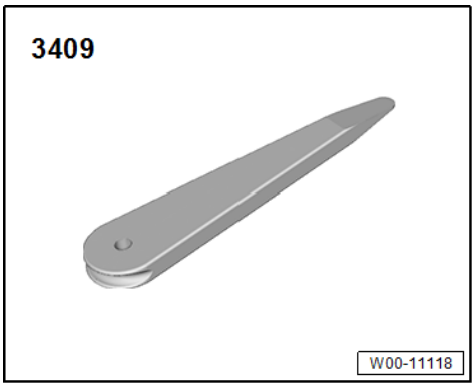

- Wedge -T10383-

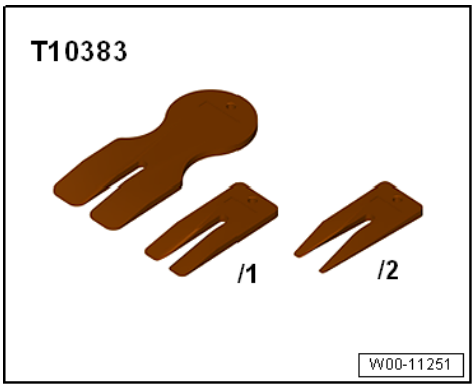

- Dismantling tool -T40280-

◆ Removal lever -80-200-

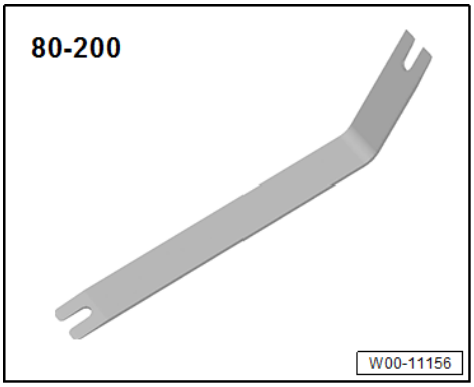

3.2 Removing and installing the pedal covers on the accelerator and brake pedals (left-hand drive vehicles)

3.2.1 Removing the pedal covers

– Remove the pedal covers using the removal wedge -3409-.

3.2.2 Automatic gearboxes: Installing the pedal covers on the brake and accelerator pedals

> ⚠ ***WARNING***
>
> ***Under no circumstances use silicone spray or tyre mounting paste when installing the pedal covers.***
>
> ***It is best to use cleaning solution D.009.401.04 to clean the pedals and covers, as special rubber care products will cause the pedal cover surfaces to become slippery.***
>
> ◆ ***Risk of accident caused by the driver's feet slipping from the pedal as well as the pedal cover becoming loose.***

Brake pedal

– Before installation, spray the brake pedal with cleaning solution D.009.401.04.

– Starting from underneath -in the direction of arrow A-, pull the pedal cover over the pedal -in the direction of arrow B-. Make sure that the central guide parts -C- are in the correct position on the pedal and the entire outer rubber lip is in the correct position on the pedal cover. Press the pedal cover securely into place.

– Central guide parts must be clipped into the foot of the pedal -D-.

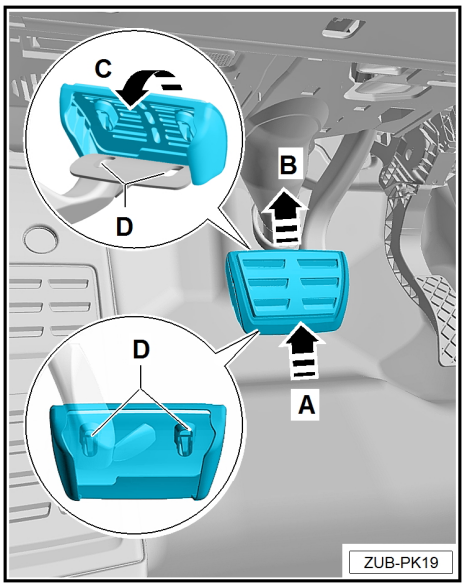

Accelerator pedal

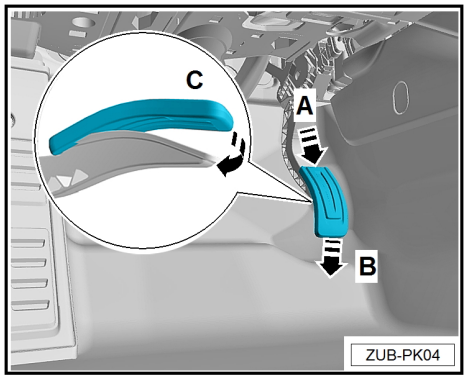

- Starting from above -in the direction of arrow A-, pull the pedal cover over the pedal -in the direction of arrow B-. Make sure that the entire outer rubber lip -C- is in the correct position on the pedal cover.
- Using the small wedge, pull the upper-left side of the rubber lip over the pedal.

Note

Use a mirror to check that the outer rubber lips are in the correct position. Do the same for the central guide parts on the pedals.

3.3 Removing and installing the pedal covers on the accelerator and brake pedals (right-hand drive vehicles)

3.3.1 Removing the pedal covers

- Remove the pedal covers using the removal wedge -3409-.

3.3.2 Automatic gearboxes: Attaching the pedal covers to the brake and accelerator pedals

WARNING

Under no circumstances use silicone spray or tyre mounting paste when installing the pedal covers.

It is best to use cleaning solution D.009.401.04 to clean the pedals and covers, as special rubber care products will cause the pedal cover surfaces to become slippery.

- ***Risk of accident caused by the driver's feet slipping from the pedal as well as the pedal cover becoming loose.***

Brake pedal

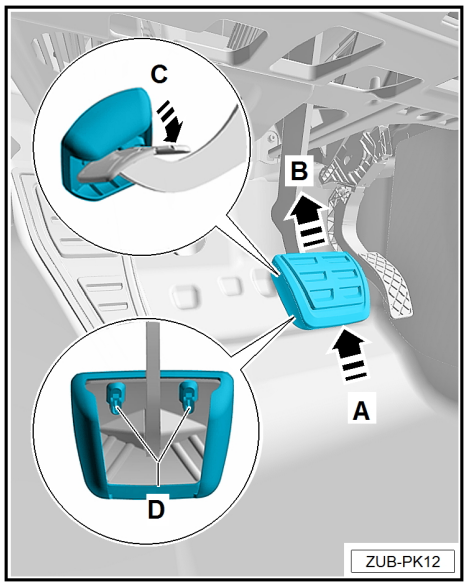

- Before installation, spray the brake pedal with cleaning solution D.009.401.04.
- Starting from underneath -in the direction of arrow A-, pull the pedal cover over the pedal -in the direction of arrow B-. Make sure that the central guide parts -C- are in the correct position and the entire outer rubber lip is in the correct position on the pedal cover.
- Central guide parts must be clipped into the foot of the pedal -D-.

Accelerator pedal

– Starting from above -in the direction of arrow A-, pull the pedal cover over the pedal -in the direction of arrow B-. Make sure that the right and left side of the outer rubber lip is in the correct position -in the direction of arrow C- on the pedal cover.
– Using the small wedge, pull the upper-left side of the rubber lip over the pedal.

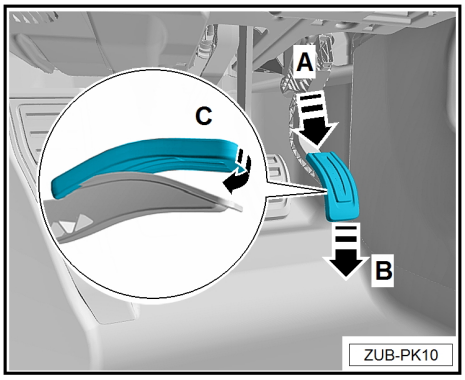

Note

Use a mirror to check that the outer rubber lips are in the correct position. Do the same for the central guide parts on the pedals.

3.4 Removing and installing the footrest

3.4.1 Automatic gearboxes: Removing the foot rest (left-hand drive vehicles)

– Remove the cover -2- for securing bolt -A- using the removal wedge -3409-.

Caution

A seal, which must not be lost or damaged, is located on the cover.

– Press on the footrest -1- and remove securing bolt -A-.
– Lift the footrest -1- from the top and remove in the -direction of the arrow-.

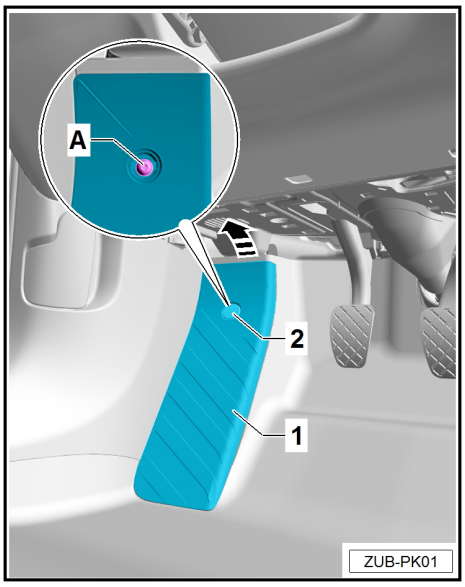

3.4.2 Automatic gearboxes: Installing the foot rest (left-hand drive vehicles)

– Insert the bottom of the footrest -1- and press in the -direction of the arrow-.

Note

Make sure that the rubber seal for the fuse carrier is in the correct position.

– Press on the footrest -1- in the -direction of the arrow- and screw into place.

– Clip the cover -2- for the securing bolt -A- in place.

Note

◆ *Make sure the seal on the cover -2- is in the correct position.*

◆ *All of the retaining lugs on the cover -2- must be present.*

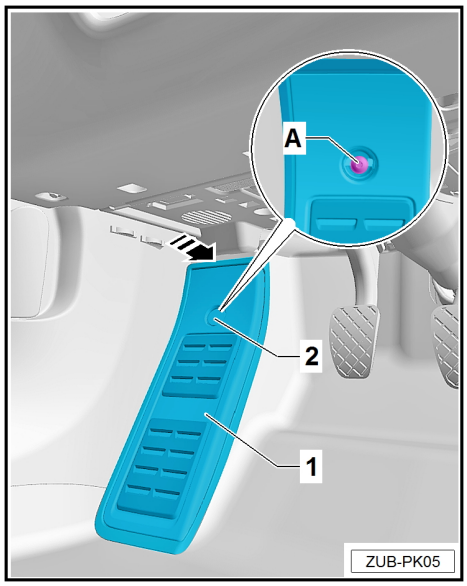

3.4.3 Automatic gearboxes: Removing the foot rest (right-hand drive vehicles)

– Remove the floor mat from the vehicle.

– Starting from the bottom and working upwards, unclip the footrest -1- using the removal wedge -3409- in the -direction of the arrow-.

– Remove the footrest -1-.

WARNING

Remove broken snap-on elements from the footrest using tweezers to make sure that the new footrest is in the correct position!

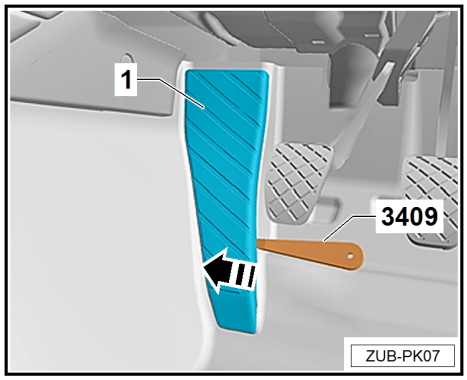

3.4.4 Automatic gearboxes: Installing the foot rest (right-hand drive vehicles)

– Position the footrest -1- in the -direction of the arrow-.
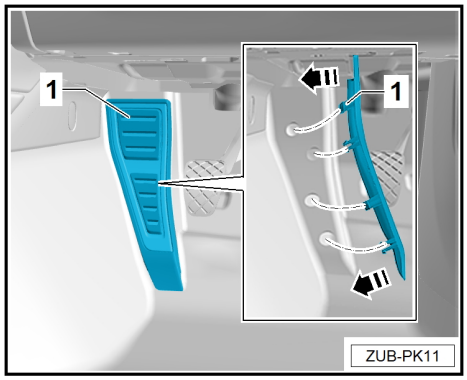
– Install the footrest -1- fully into the fixtures of the baseplate and press firmly in place.